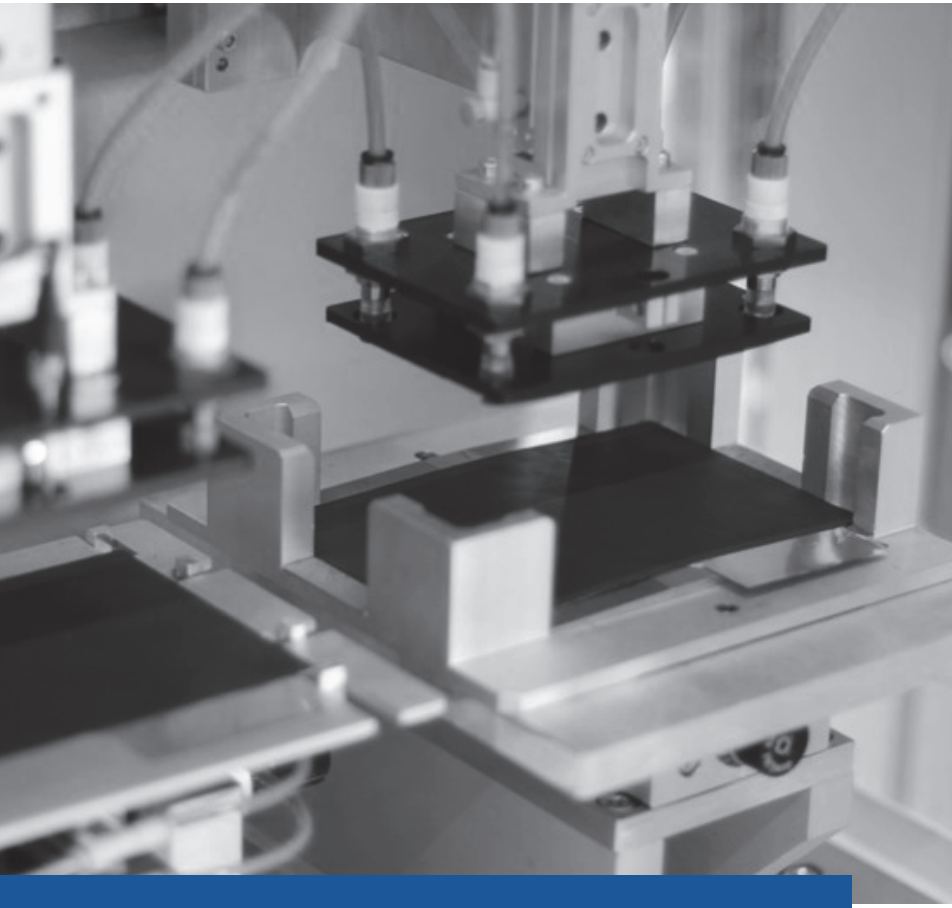

PRODUCTION PROCESS OF A LITHIUM-ION BATTERY CELL

5TH EDITION, 2026

PEM | RWTH AACHEN UNIVERSITY

VDMA
Battery Production

The Chair of Production Engineering of E-Mobility Components (PEM) of RWTH Aachen University has been active in the field of lithium-ion battery production technology for many years. These activities cover both automotive and stationary applications. Through a multitude of national and international industrial projects with companies at every level of the value chain as well as key positions in renowned research projects, PEM offers extensive expertise.

The VDMA represents more than 3,500 German and European mechanical and plant engineering companies. The Battery Production specialist department is the point of contact for all questions relating to battery machinery and plant engineering. It researches important technology and market information, organizes customer events and roadshows, offers platforms for exchange within the industry, and maintains dialog with research and science.





PEM
Production Engineering of E-Mobility Components of RWTH Aachen University
Bohr 12
52072 Aachen

www.pem.rwth-aachen.de

VDMA
Battery Production
Lyoner Straße 18
60528 Frankfurt am Main

www.vdma.eu/en/battery-production-equipment

Authors

PEM of RWTH Aachen University



Prof. Dr.-Ing. Dipl.-Wirt.-Ing. Heiner Hans Heimes
Member of Institute Management
H.Heimes@pem.rwth-aache.de



Prof. Dr.-Ing. Achim Kampker MBA
Founder & Director of the Chair
A.Kampker@pem.rwth-aachen.de



Henrik Born, M. Sc.
Chief Engineer
H.Born@pem.rwth-aachen.de



Paul Lingohr, M. Sc.
Group Lead
Battery Production Management
P.Lingohr@pem.rwth-aachen.de



Clemens Scherer, M. Sc.
Research Associate
Battery Production Management
C.Scherer@pem.rwth-aachen.de

VDMA



Dr. Sarah Michaelis
Division Manager
VDMA Battery Production
Sarah.Michaelis@vdma.eu



Benedikt Rothhagen
Project Manager
VDMA Battery Production
Benedikt.Rothhagen@vdma.eu

Looking for the latest electric mobility guides?

Find them here!

Aachen, February 2026
PEM of RWTH Aachen University & VDMA
In-house printing, 5th edition
ISBN: 978-3-947920-71-6

Operating Principle

of lithium-ion battery cells

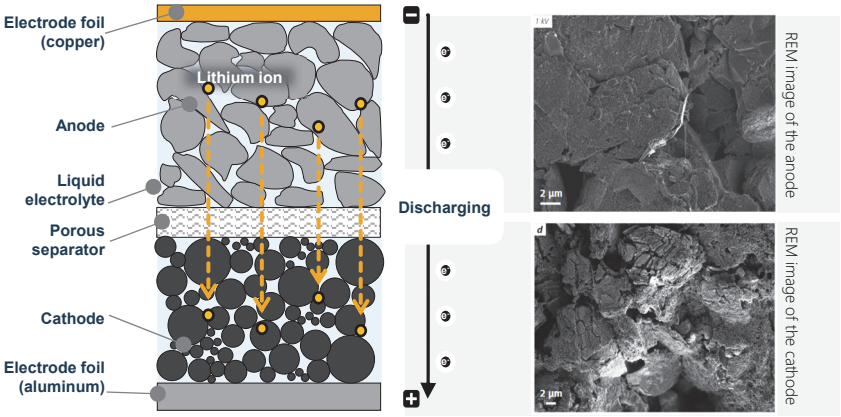

Explanation of the operating principle

- During discharge, lithium ions deintercalate from the anode (negative electrode) and intercalate into the cathode (positive electrode). During charging, the process is reversed; lithium ions are stored in the anode structure.
- Electrons flow in parallel through the external circuit from the anode to the cathode, supplying usable electrical energy.
- The cell voltage results from the potential difference between the electrode materials (typically 3.2 to 3.7 volts for lithium-ion cells).
- The energy content is determined by the amount of reversibly inter-calatable lithium ions in the host structures. The more lithium ions that can be reversibly intercalated, the higher the battery's capacity and energy content.
- Reversible intercalation enables rechargeability, whereby cycle stability depends on the structural stability of the electrode materials.

Production of a lithium-ion battery

Electrode manufacturing | Cell assembly | Cell finishing

- The production of lithium-ion battery cells comprises three main process steps – electrode manufacturing, cell assembly, and cell finishing –, in which the electrodes are manufactured, placed in a housing together with the separator and electrolyte, and electrochemically activated.
  - Electrode production can be carried out largely independently of the cell type.
  - Cell assembly is highly dependent on format, as wound and stacked designs require different manufacturing approaches.
  - Cell finishing can be performed largely independently of the cell type.

* According to Zeiss, Li-Ion Battery Components – Cathode, Anode, Binder, Separator – Imaged at Low Accelerating Voltages (2016)

Cell formats

of lithium-ion batteries

Pouch cell

A pouch cell consists of stacked electrodes (stack) that are sealed in a flexible, multi-layer aluminum-polymer film. Metal tabs on the sides serve as electrical connections. The individual electrode layers are separated from each other by separators, and the entire stack is tightly enclosed by sealing the edges of the film.

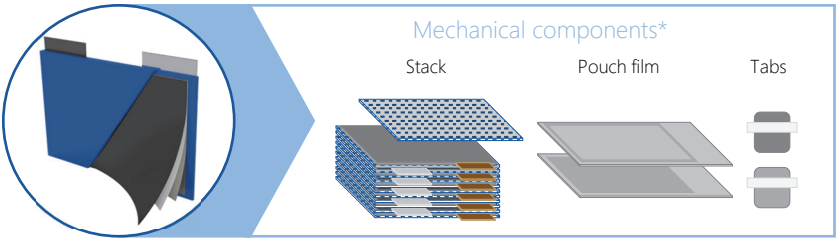

Cylindrical cell

A cylindrical cell consists of wound electrodes with a separator (jelly roll), which is inserted into a stable metal housing. Inside, there are additional mechanical components for contacting (including arrester discs) and as safety mechanisms. The electrical connections are located at both ends of the cylinder, with the housing often serving as the negative pole.

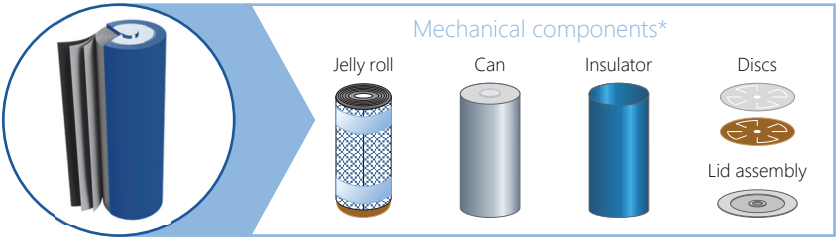

Prismatic cell

A prismatic cell consists of stacked or wound electrodes (stack/flat winding) that are inserted into a rectangular metal housing. Inside, there are additional mechanical components for contacting (particularly the cover assembly) and safety mechanisms. The electrical connections are located on the top or the opposite side as a counter-tab design.

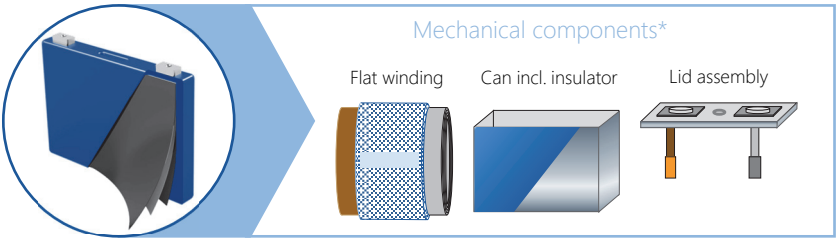

* Exclusive representation of the main components (not exhaustive); active material, electrolyte, etc. not explicitly shown; components depend on the specific cell design.

Technology Radar

for the development of battery technologies

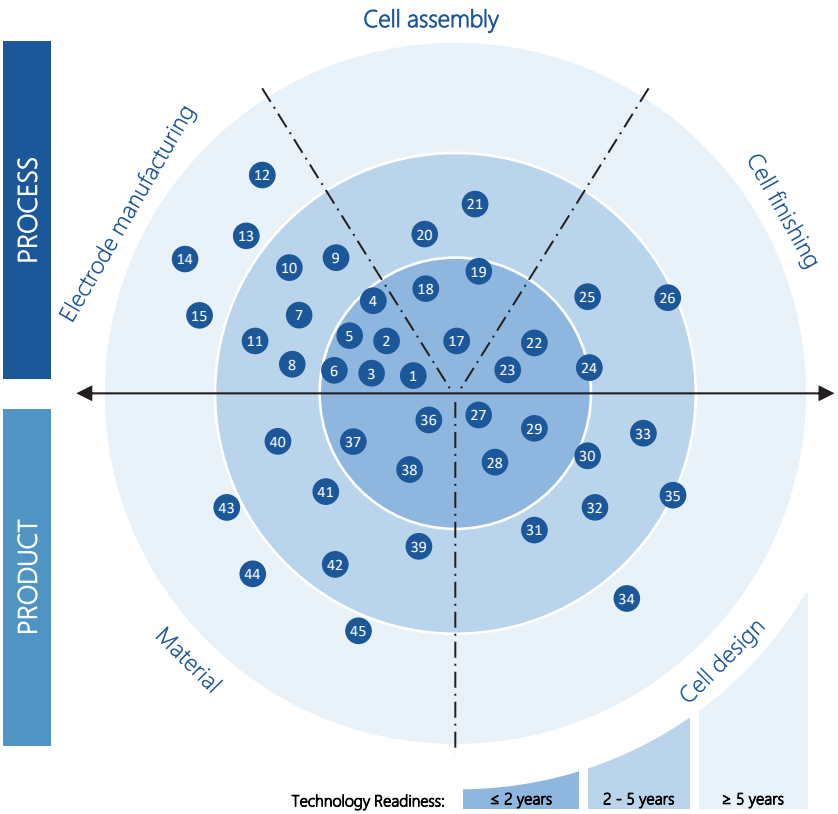

Electrode manufacturing

1. Multi-layer coating
2. Infrared drying
3. Dry coating (anode)
4. Dry coating (cathode)
5. Laser cutting (cathode)
6. Laser drying
7. Roll-to-roll baking
8. Trajectory mixing
9. Pre-lithiation
10. Electrode structuring
11. UV drying/curing
12. Induction drying
13. PVD process
14. CVD process
15. Atomic layer deposition (ALD)

Cell assembly

17. Mini-environments
18. Drum-based stacking
19. Parallel filling
20. Smart wetting
21. Helix stacking

Cell finishing

22. Model-based formation
23. Open formation
24. Predictive aging
25. Predictive formation
26. External formation

Cell design

27. Large-format cells
28. Tabless design
29. Blade format
30. Structure-supporting cell casings
31. Multi-layer separators
32. Fabric/composite current collector
33. Cell-integrated sensor technology
34. Anode-free cells
35. Bipolar cell architecture

Material

36. Manganese-rich cathodes
37. High-silicon anodes
38. Ultra-high-nickel cathodes
39. Sodium-based cathodes
40. Lithium metal anode
41. Polymer solid-state battery
42. Cathode blending
43. Sulfur-based cathodes
44. Sulfide solid-state battery
45. Oxide solid-state battery

Disclaimer: The technology radar provides a current snapshot of the industry and examines the respective technologies in relation to their use in series production. It is an excerpt and does not claim to be exhaustive.

Dosing & Mixing

Electrode manufacturing

Anode recipe*
Active material: Graphite (95 wt.%)
Conductive carbon: nanomicroscopic carbon, e.g. Carbon Black® (1 wt.%)
Solvent: Deionized water
Binder: CMC (2 wt.%)
Additive: SBR (2 wt.%)

Cathode recipe*
Active material: $Li(NiMnCo)O_2$ (95 wt.%)
Conductive carbon: nanomicroscopic carbon, e.g. Carbon Black® (1 wt.%)
Solvent: N-Methyl-2-pyrrolidon (NMP)
Binder: PVDF (4 wt.%)

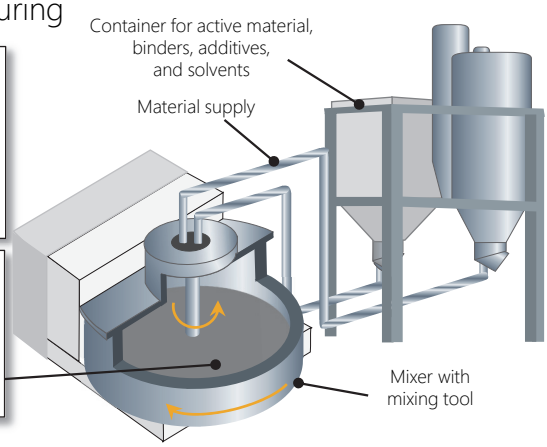

Cell assembly | Cell finishing

Production process

- Active material and additives are dosed into the mixing vessel.
- Dry mixing takes place to break up heterogeneous phases (distributive mixing).
- Then, the solvent is added partially or entirely.
- The mixture is homogenized and deagglomerated (dispersive mixing).
- If not used as an additive, a binder solution is optionally added and incorporated.
- By applying vacuum, the previously bound and incorporated air is evacuated from the mixture.
- The final product is referred to as "slurry."
- Energy is applied in each case by one or more rotating tools.

Process parameters & requirements

- Mixing time: 20 min. - 6 hrs.
- Temperature control: 20 - 40°C
- Atmosphere (in the mixer): inert gas or vacuum
- Atmosphere (installation site): clean room or no requirement
- Different mixers for anode and cathode to avoid cross contamination

Quality parameters [excerpt]

- Homogeneity of the slurry
- Agglomerate size
- Bubble-free
- Purity (foreign matter content)
- Viscosity

Current technology alternatives

- Continuous mixing by a twin-screw extruder
- Intensive mixing
- Inline dispersing
- Trajectory mixing

Innovations/Trends

- Dry mixing/solvent-free mixing

Production costs [excerpt]**

Investment for machinery and equipment: €30m - €55m
(Mixing)

* Sample electrode formulations
** Study by PEM of RWTH Aachen University: 10 GWh p.a., approx. 30,000,000 pouch cells p.a., cell capacity: 80 Ah

Coating & Drying

Electrode manufacturing

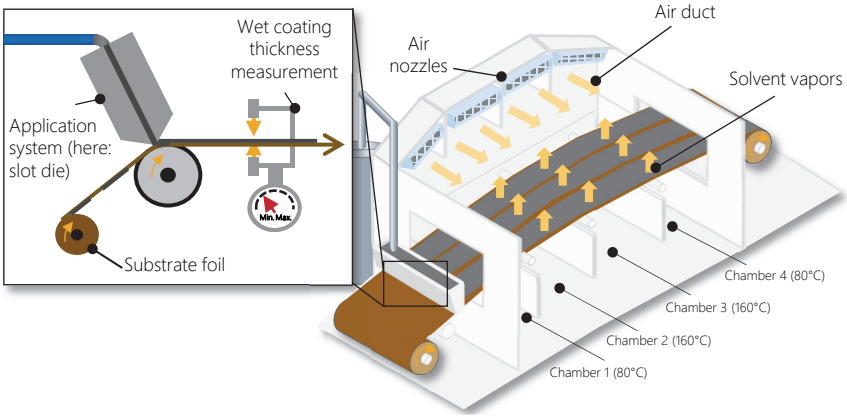

Cell assembly | Cell finishing

Production process

- The substrate foil is coated with the slurry using an application tool (e.g. slot die, doctor blade, anilox roller).
- Both continuous or intermittent coating of the substrate foil is possible.
- The coating of the top and bottom sides of the foil can be carried out simultaneously or sequentially, as is the case with the tandem coating process, for example.
- After coating, the coated substrate foil passes through a drying channel.
- The web is transported either by roller or levitation systems.
- Heat is applied to remove the solvent from the coating.
- To realize an individual temperature profile, the channel is divided into different temperature zones.
- If toxic solvent has been used, it is recovered and processed or recycled.
- After passing through the dryer, the web is cooled down to room temperature and wound up.

Process parameters & requirements

- Coating width: up to 1,500 mm
- Drying speed: 35 - 80 m/min.
- Drying distance: up to 100 m
- Temperature profile in the drying zones: 50 - 160°C
- Solvent recovery
- Appropriate foil pre-tensioning is important to prevent foil tears

Quality parameters [excerpt]

Coating

- Coating thickness accuracy/homogeneity
- Surface quality (voids, particles)

Drying

- Adhesion between coating and substrate
- Residual moisture
- Surface condition (cracks etc.)

Current technology alternatives

- Multi-layer simultaneous application
- Additive manufacturing processes
- Dry coating *(see next page)*

Innovations/Trends

Upstream heating systems to shorten drying times and save energy

- Laser drying
- Infrared drying
- Induction drying

Production costs* [excerpt]

Investment for machinery and equipment: €35m - €65m
(Coating and drying)

* Study by PEM of RWTH Aachen University: 10 GWh p.a., approx. 30,000,000 pouch cells p.a., cell capacity: 80 Ah

Dry Coating

Electrode manufacturing

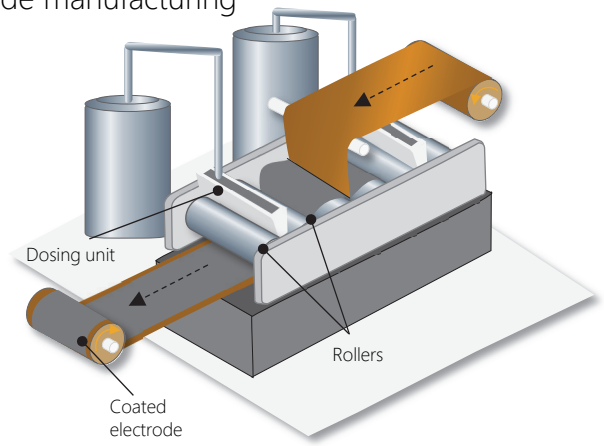

Cell assembly | Cell finishing

Production process – calendering procedure

- Active material, conductive additives, and binders are dry-mixed without solvents.
- Through mechanical shearing, the binder forms fine fibers (fibrils) which hold all materials together like a network.
- The powder mixture is fed to the rollers and compressed into a thin film under pressure and temperature.
- The rollers rotate in opposite directions at different speeds. The speed of the outer rollers increases towards the inner rollers.
- The difference in speed results in a higher frictional force on the faster roller, causing the film to adhere to it and be transported from the outer to the inner gap.
- Both electrode foils are cut to the desired coating width, usually with a rolling knife.
- In the central gap, both dry films are applied simultaneously on both sides to the current collector foil, which is often pre-treated with carbon-based primers.

Process parameters & requirements

- Upstream dry mixing process
- Double-sided coating process
- Line pressure: 150 - 300 N/mm
- Roll temperature control: 50 - 200°C
- Foil pre-tensioning important to prevent foil tears

Quality features [excerpt]

Coating

- Layer thickness accuracy/homogeneity
- Surface quality (voids, particles)
- Adhesion between coating and substrate
- Surface condition (cracks, etc.)
- Constant weight per unit area

Current technology alternatives

- Electrostatic powder coating
- Hot press/extrusion process

Innovations/Trends

- Fluorine-free thermoplastic binders

Production costs* [excerpt]

Investment for machinery and equipment: €45m - €60m
(Coating and drying)

* Study by PEM of RWTH Aachen University: 10 GWh p.a., approx. 30,000,000 pouch cells p.a., cell capacity: 80 Ah

Dry Coating

Electrode manufacturing

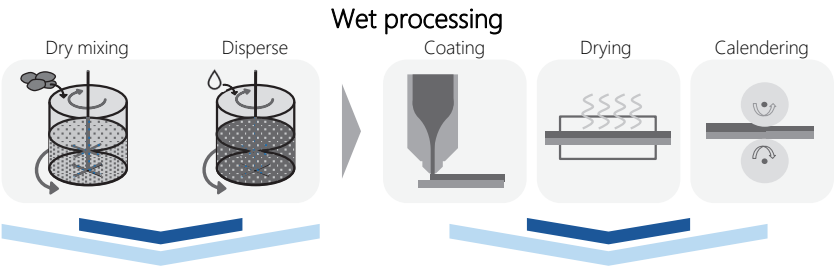

Comparison of dry and wet processing

- The elimination of solvents changes the processing of raw materials and the requirements for plant technology.
- Complex multi-stage dispersion processes in wet processing are replaced by a single-stage, often continuous dry mixing process.
- The introduction of high shear rates causes the PTFE binder systems to form fibrils, which can cause the powder to stick together.
- Compared to wet coating, the elimination of solvents means that no drying section with convection ovens and solvent recovery systems is required.
- The coating process already includes the compaction of the coating by calender rolls. A calendering process attached to the coating is usually not necessary.

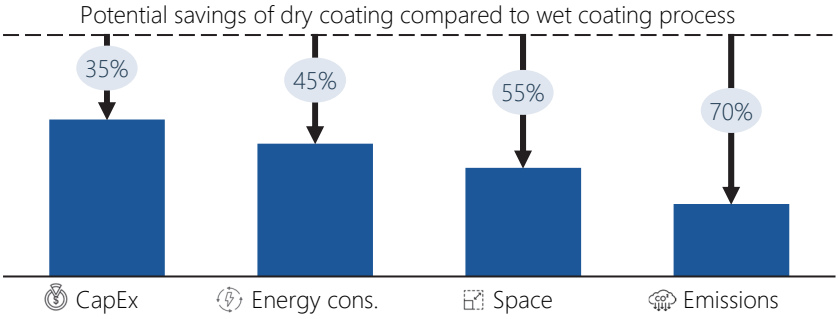

Benefits

- Lower investment costs
- Lower energy costs
- Less space required
- Reduced process time

Challenges

- Material restrictions
- Technical purity/dust generation
- Limited industrial experience
- Lower adhesion

Calendering & Slitting

Electrode production

Calendering

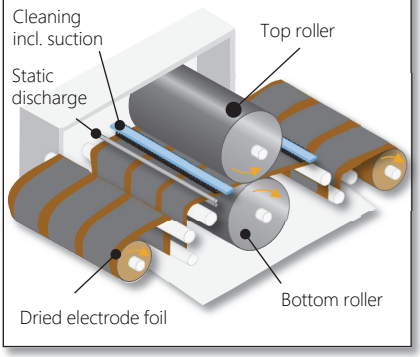

Slitting

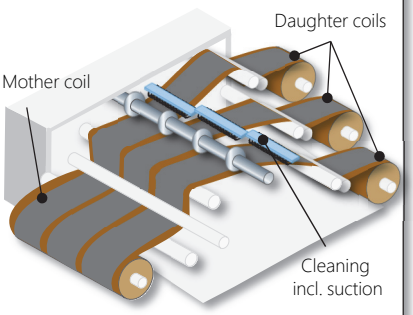

Cell assembly | Cell finishing

Production process

- In calendering, the copper or aluminum foil coated on both sides is compacted by a rotating pair of rolls.
- Before calendering, the electrode foil is statically discharged and cleaned by brushes/air streams.
- The material is compacted by the upper and lower rollers. In the case of thermoplastic binder systems, this process is usually supported by pre-tempering the material.
- The pair of rolls generates a line pressure that can be precisely defined.
- After calendering, the electrode web is cleaned and wound again (roll-to-roll process).
- Slitting is a cutting process in which a wide electrode strip (mother coil) is divided into several smaller electrode strips (daughter coils).
- The division takes place along the length of the electrode strip, either between the coatings or in the middle of the coating.
- Rolling knives are generally used for this purpose.
- The cut electrode strips are cleaned and rolled up (roll-to-roll process).

Process parameters & requirements

- Maintaining a constant line pressure of up to 2,500 N/mm
- Calendering speed: 60 - 100 m/min.
- Pre-heating sections and roll tempering optionally possible (approx. 50 - 250°C)
- Cutting speed (mechanical): 80 - 150 m/min.
- Suction for the cut edge strips

Quality parameters [excerpt]

Calendering
- Defined porosity and thickness
- Adhesion of the material to the film
- Surface cleanliness
- Wrinkle-free film

Slitting
- Burr-free and positionally accurate cutting
- Dust extraction
- Cutting width tolerance: ±150 - ±250 µm

Current technology alternatives

- Laser slitting

Innovations/Trends

- Multi-roll calender systems
- Enhanced web speeds through innovative roll design

Production costs* [excerpt]

Investment for machinery and equipment: €10m - €15m
(Calendering and slitting)

* Study by PEM of RWTH Aachen University: 10 GWh p.a., approx. 30,000,000 pouch cells p.a., cell capacity: 80 Ah

Vacuum Drying

Electrode manufacturing

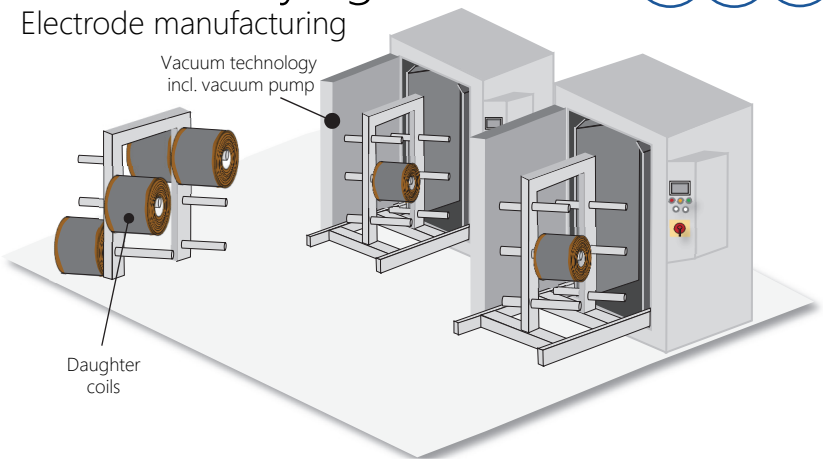

Cell assembly | Cell finishing

Production process

- The coated daughter coils are placed on a special tray. The coils are then dried in a vacuum oven.
- Under reduced pressure, residual solvent and moisture absorbed from air evaporate at moderate temperatures below their atmospheric boiling points, reducing the residual content to low ppm levels.
- During the drying process, the drying chambers are cyclically flushed with a gas to remove moisture from the chamber (inert gas flushing).
- The use of nitrogen ensures that no explosive mixture is created when solvent residues evaporate.
- After vacuum drying is completed, the coils are either transferred directly into the assembly area configured as a drying room or vacuum-sealed for storage. The vacuum ovens are often used as airlocks into the drying room for the daughter coils.
- Alternatively, post-drying can take place later in the process chain before electrolyte filling in the form of cell baking. This achieves process optimization and reduced drying room size.

Process parameters & requirements

- Working pressure: 0.07 mbar < p < 1,000 mbar
- Drying time: 8 - 48 hrs./batch
- Drying temperature: 60 - 150°C
- Inert gas supply

Quality parameters [excerpt]

- Constant heat supply and stable vacuum
- Residual moisture content (no residual moisture desired)
- Surface condition (cracking, etc.)

Current technology alternatives

- Continuous dryers (roll-to-roll baking) with laser or infrared heating: Coils are rewound under vacuum inside the dryer chamber. Rewinding can significantly reduce drying time.

Innovations/Trends

- Use of continuous processes for post-drying in the form of continuous ovens, coil baking, and cell baking

Production costs* [excerpt]

Investment for machinery and equipment: €5m - €15m
(Vacuum drying)

* Study by PEM of RWTH Aachen University: 10 GWh p.a., approx. 30,000,000 pouch cells p.a., cell capacity: 80 Ah

Separating

Cell assembly

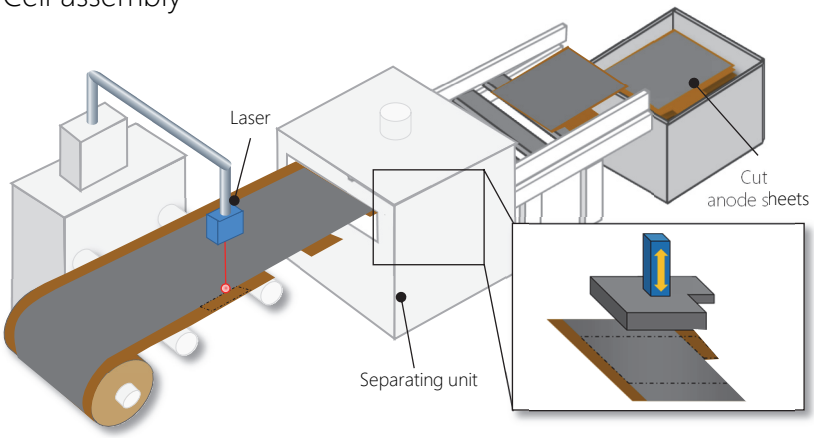

Electrode manufacturing → Cell finishing

Production process

- Separating is the process of cutting electrode sheets from a continuous electrode web.
- Before the actual separation, a so-called notching process can be carried out.
- During notching, the dried electrode web is unwound, and the contour of the electrodes is pre-formed in the web-like state.
- After notching, the electrode web can either be re-wound to a coil or fed directly to the separation process.
- Both notching and separation can be performed by laser or shear cutting.
- The separated electrode sheets are stored and transported to the next process step.
- In the case of single-sheet stacking, the separator foil is also cut to sheets.

Process parameters & requirements

- Separation time (punching): 0.2 sec./sheet
- Separation tool: very precise edge quality (in relation to wear resistance)

Quality parameters [excerpt]

- Edge geometry (e.g. minimization of burr formation during shear cutting and defect prevention by suitable radii in tab area)
- Minimization of thermal and mechanical influences during the separation process
- Minimization of the heat-affected zone and suction extraction of the vaporized material during the laser cutting process
- Tolerance requirements: approx. ±200 µm

Current technology alternatives

- Laser cutting: Instead of with the conventional punching tool, the electrodes can also be cut (out) with a laser.

Innovations/Trends

- Increase in tool utilization times (e.g. through coating)
- Increase in cutting/punching speed

Production costs* [excerpt]

Investment for machinery and equipment: €20m - €30m
(Separation)

* Study by PEM of RWTH Aachen University: 10 GWh p.a., approx. 30.000.000 pouch cells p.a., cell capacity: 80 Ah

Stacking
Cell assembly

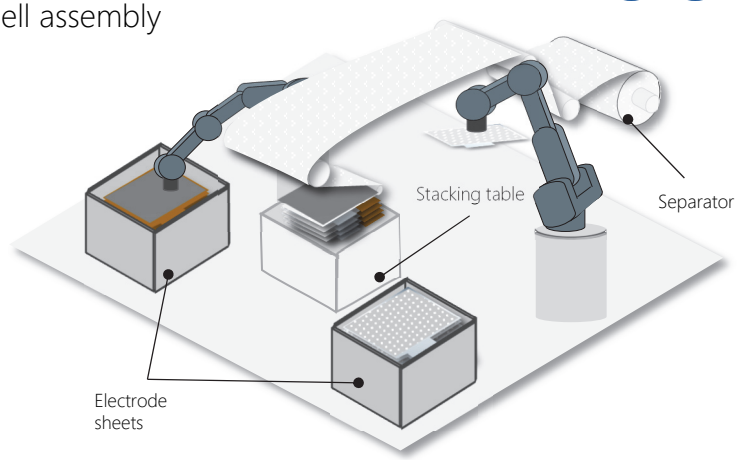

Electrode manufacturing → Cell finishing

Production process

- During the stacking procedure, a cell stack is formed from an alternating arrangement of anode, separator, cathode, separator, etc.
- A cell stack can consist of up to 120 individual layers.
- Various stacking technologies can be used to produce the cell stack. Many stacking technologies are manufacturer-specific and patented.
- The electrode sheets are usually picked, transported, and positioned by vacuum grippers.
- A common stacking variant used in the industry is the so-called Z-folding.
- In Z-folding, the anode and cathode are inserted into the web-shaped separator from both sides. The Z-shaped arrangement of the separator gives the process its name.
- After stacking, the cell stack is wrapped with separator, the separator is cut off and fixed with an adhesive tape.

Process parameters & requirements

- Stacking speed: <1 sec./sheet for Z-folding and single-sheet stacking
- Stacking accuracy: <200 - 300 µm

Quality parameters [excerpt]

- Positioning accuracy of the electrode sheets
- Mechanical separator preload
- Damage-free handling of the electrode sheets

Current technology alternatives

- Single-sheet stacking
- Lamination: Electrode sheets are laminated with the separator.
- Pocket stacking: placement of the cathode sheets in a separator pocket and subsequent stacking with anode

Innovations/Trends

- Growth of stacking speed (sheets/sec.) while increase of stacking accuracy
- Development of new stacking technologies to reduce cycle times
- Handling of large-format electrode sheets

Production costs* [excerpt]

Investment for machinery and equipment: €25m - €60m
(Stacking)

* Study by PEM of RWTH Aachen University: 10 GWh p.a., approx. 30.000.000 Pouch cells p.a., cell capacity: 80 Ah

Winding & Tab Welding

Cell assembly

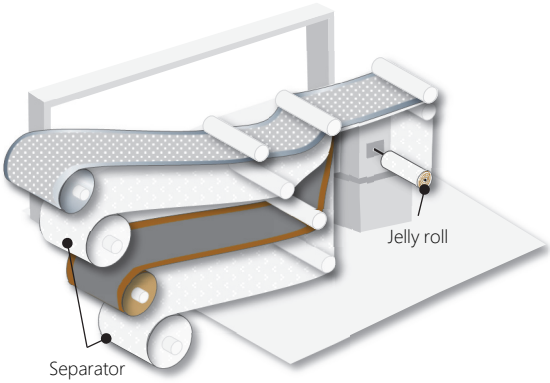

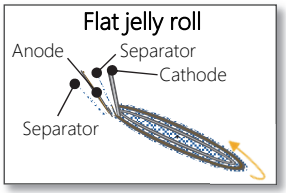

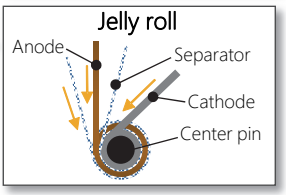

Electrode manufacturing | Cell finishing

Production process

- Winding is used in the manufacture of round cells. (Flat windings are still used in some prismatic cells. However, stacking is now more commonly carried out here.)
- When manufacturing the winding for a round cell, the electrode strips and two separator strips are fed into the process.
- Before winding, a discharge tab is welded to the anode.
- Winding takes place around a center pin (round cell) or winding mandrel (prismatic cell). The order of the tracks is analogous to the stacking process.
- The winding is then secured with an adhesive strip.
- The round or flat winding is usually referred to as a "jelly roll."
- The center pin can either be removed or remain in the cell winding. Leaving the center pin inside the cell stabilizes the round winding during volume changes caused by charging and discharging processes ("breathing").

Process parameters & requirements

- Machine throughput: up to 30 cells/min. (round cells)
- Integration of the tab welding process in the winding machine for cylindrical cells
- Machine throughput: up to 6 cells/min. (prismatic cells)

Quality parameters [excerpt]

- Precise positioning and alignment of the electrode and separator webs
- Web tension of the electrode and separator webs
- Prevention of electrostatic charging

Current technology alternatives

- none

Innovations/Trends

- Increasing machine throughput
- Increasing the winding diameter
- Functional integration of the center pin (e.g. as heat dissipation)
- Integration of the notching process

Production costs* [excerpt]

Investment for machinery and equipment: €20m - €30m
(Winding)

* Study by PEM of RWTH Aachen University: 10 GWh p.a., approx. 550,000,000 cylindrical cells p.a., cell capacity: 5 Ah

Packaging

Cell assembly

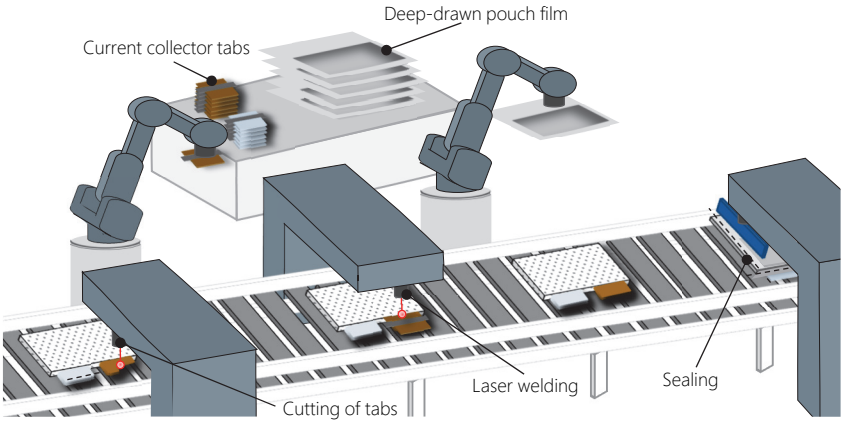

Electrode manufacturing — Cell finishing

Production process

- The uncoated flags of the cell stack are cut to a defined length.
- The shortened flags of the cell stack are each welded to an anode or cathode current collector tab. The contact is usually made by means of an ultrasonic welding process.
- The pouch film (aluminum composite foil) is unwound and deep-drawn.
- The cell stack is positioned in the deep-drawn pouch film so that the tabs extend beyond the edge of the pouch film.
- The top of the cell stack is also covered with pouch film and sealed gas-tight on three sides of the foil. The resulting pouch pocket has an open side, which is used in the next step to fill the cell with electrolyte.
- The sides where tabs extend from the pouch are usually sealed.

Process parameters & requirements

- Material compatibility at joint areas
- Parameter set for ultrasonic welding: frequency, amplitude, pressure, time
- Flexible beam guidance and shaping for laser welding
- Deep-drawing of pouch film: up to 10 mm
- Sealing temperature and pressure

Quality parameters [excerpt]

- Low mechanical and thermal stress during the welding processes
- Low contact resistance of the welds for electrical contacting
- Strength and tightness of the sealing
- Rule of thumb: "1 mm seal seam width corresponds to approximately one year of calendrical service life."

Current technology alternatives

- Sealing by means of impulse/contact sealing
- Joining of the tabs to the cell flags by means of laser welding process
- Use of two single foils or a folded pouch film (bookfolding)

Innovations/Trends

- Reduction of mechanical and thermal stress
- Increase of the deep-drawing depth for thicker cell stacks
- Positioning of tabs on opposite sides instead of on one side

Production costs* [excerpt]

Investment for machinery and equipment: €20m - €35m
(Packaging, pouch cells)

* Study by PEM of RWTH Aachen University: 10 GWh p.a., approx. 30,000,000 pouch cells p.a., cell capacity: 80 Ah

Packaging

Cell assembly

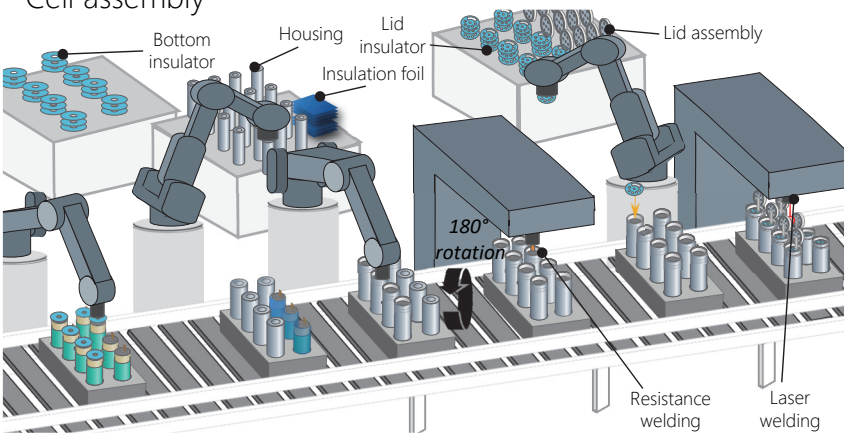

Electrode manufacturing — Cell finishing

Production process

- An insulator ring is placed on the top of the jelly roll (side of the anode tab).
- The cell can is pushed over the jelly roll so that the insulator ring now rests on the bottom of the cell can. The anode tab is joined to the bottom of the cell can by resistance welding.
- Another insulator ring is placed on the top of the jelly roll (side of the cathode tab).
- If the cell can has a conical opening, the opening angle can be reduced to 90 degrees by swaging. A bead is imprinted on the housing.
- The lid assembly is welded to the cathode tab.
- After electrolyte filling, the lid assembly is crimped onto the beaded cell cup, thus closing the cylindrical cell.

Process parameters & requirements

- Material compatibility at joint areas
- Parameter set for ultrasonic welding: frequency, amplitude, pressure, time
- Flexible beam guidance and shaping for laser welding

Quality parameters [excerpt]

- Low mechanical and thermal stress during welding processes
- Low contact resistance at the weld points
- Tightness of the cell
- Low impact from handling the coil (e.g., avoiding displacement of the layers due to friction when inserting into the housing)

Current technology alternatives

- Welding of the cover assembly by means of ultrasonic or laser beam welding

Innovations/Trends

- Reduction of mechanical and thermal stress during welding processes
- Avoiding the use of tabs (e.g. Tesla's tabless design)

Production costs* [excerpt]

Investment for machinery and equipment: €35m - €45m
(Packaging, cylindrical cells)

* Study by PEM of RWTH Aachen University: 10 GWh p.a., approx. 550,000,000 cylindrical cells p.a., cell capacity: 5 Ah

Packaging

Cell assembly

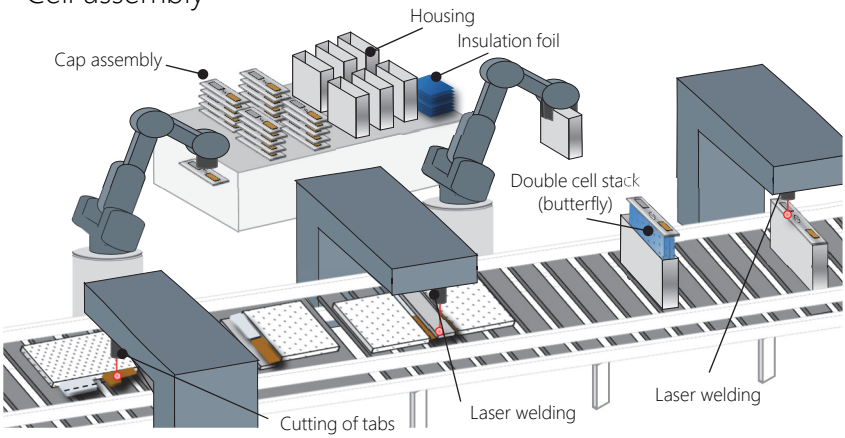

Electrode manufacturing — Cell finishing

Production process

- The uncoated tabs of the cell stack are shortened to a defined length.
- The shortened tabs of the cell stack (or the uncoated edges of the flat coil) are welded to an anode or cathode lead, respectively.
- The conductors are then welded to the cover assembly.
- The contacts between the cell stack and the cover assembly are usually made by ultrasonic welding.
- The cell stack is often wrapped in an insulating foil to protect it from contact with the housing. The cell housing may contain additional insulating components.
- The cell stack is inserted into the housing until the cover assembly rests on the edge of the housing. The housing and cover are joined together using a laser welding process.
- The cap assembly usually includes a filling opening, which is the only opening in the cell housing after the cover assembly has been welded.

Process parameters & requirements

- Material compatibility at joint areas
- Parameter set for ultrasonic welding: frequency, amplitude, pressure, time
- Flexible beam guidance and shaping for laser welding
- Possible subsequent cleaning in case of welding spatter
- Laser protection during laser welding

Quality parameters [excerpt]

- Low mechanical and thermal stress during the welding processes
- Low contact resistance of the welds for electrical contacting
- Tightness of the weld seam between housing and cap assembly

Current technology alternatives

- Laser welding can be used as an alternative to the ultrasonic welding process for contacting between the cell stack and the cap assembly.

Innovations/Trends

- Reduction of mechanical and thermal stress during welding operations
- Connecting multiple cell stacks within one housing

Production costs* [excerpt]

Investment for machinery and equipment: €45m - €60m
(Packaging, prismatic cells)

* Study by PEM of RWTH Aachen University: 10 GWh p.a., approx. 22,000,000 prismatic cells p.a., cell capacity: 130 Ah

Electrolyte Filling

Cell assembly

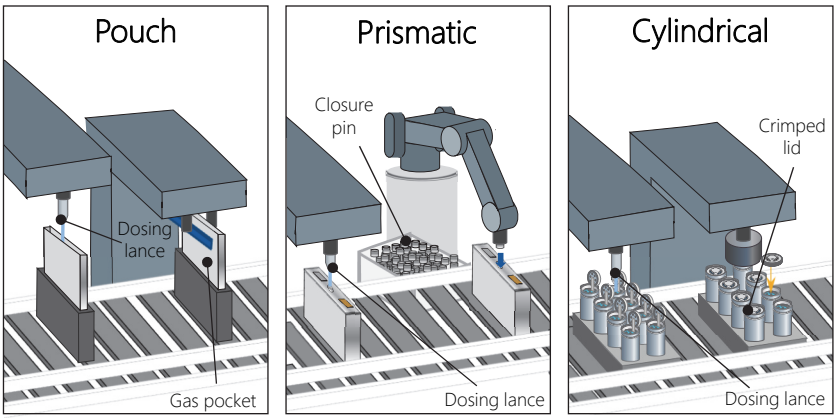

Electrode manufacturing → Cell finishing

Production process

- The electrolyte is filled after the electrode stack or electrode wrap has been placed in the packaging (housing or pouch film).
- A dosing lance is positioned at the opening of the packaging. The precision of the positioning during filling has a decisive influence on possible electrolyte contamination of the packaging.
- Filling: The electrolyte is introduced into the cell packaging using the dosing lance. The accuracy of the dosing is a critical process parameter.
- Wetting: The cell is subjected to a dynamic (negative) pressure profile during and after filling. This activates the capillary effect and fills the cavities of the porous cell components with electrolyte.
- The (partial) filling and wetting can be repeated several times to ensure optimal electrolyte distribution.
- After the electrolyte has been filled, the opening of the cell packaging is closed. Both welding and sealing processes are used for this purpose.

Process parameters & requirements

- Working pressure: approx. 150 mbar
- Particularly dry/inert environment
- Tightened safety measures due to use of electrolytes
- Gravimetric measurement of the electrolyte quantity
- Continuous or cyclic filling and wetting

Quality parameters [excerpt]

- Dosing accuracy precision
- Positioning accuracy of the dosing lance
- No electrolyte residues on the packaging
- Homogeneous electrolyte distribution in the cell

Current technology alternatives

- Various dispensing methods (e.g. pump technologies)
- Final closing (pouch cells): sealing of the fourth side
- Final closing (prismatic cells): laser welding of the filling opening

Innovations/Trends

- Reducing the risk of reactions between the electrolyte and moisture, e.g. through lower dew points or pressures
- Shortening the process time in wetting
- Innovative measurement methods for monitoring wetting

Production costs* [excerpt]

Investment for machinery and equipment: €35m - €45m
(Electrolyte filling)

* Study by PEM of RWTH Aachen University: 10 GWh p.a., approx. 30,000,000 pouch cells p.a., cell capacity: 80 Ah

Pre-treatment

Cell finishing

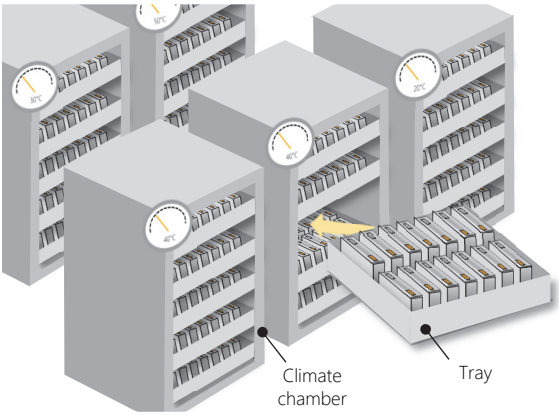

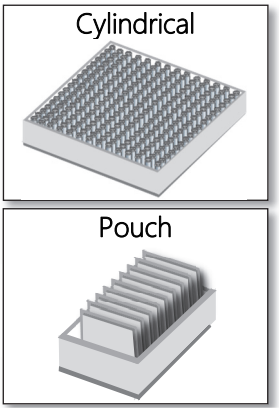

Electrode manufacturing | Cell assembly

Production process

- After the electrolyte has been filled, various technologies can be used to improve electrode wetting and prevent inactive areas during formation. These technologies include the high-temperature soaking process.
- In this process, the environment around the cells in a rack or chamber system is heated to a temperature of 30 to 50 degrees Celsius.
- The higher temperature reduces the viscosity of the electrolyte.
- This improves the contact between the liquid electrolyte and the electrolyte's access to the meso-pores of the electrode.
- This ensures faster penetration of the electrolyte into the pores of the electrode and separator.
- In addition, an initial charging of the battery cell (up to 30 percent state of charge, SoC) can be used as so-called pre-charging. This aims to prevent degradation effects during storage and enables early degassing of the cell.

Process parameters & requirements

- Homogeneous temperature application in a temperature window of 30 - 50°C
- Soaking time

Quality parameters [excerpt]

- Electrolyte distribution within the cell

Current technology alternatives

- Roll pressing (pouch cells)
- Vibrating table (prismatic/cylindrical cells)
- Pre-charging (all formats)

Innovations/Trends

- Inline measurement technology for wetting degree measurement

Production costs* [excerpt]

Investment for machinery and equipment: €5m - €15m
(High-temperature soaking)

* Study by PEM of RWTH Aachen University: 10 GWh p.a., approx. 30,000,000 pouch cells p.a., cell capacity: 80 Ah

Formation

Cell finishing

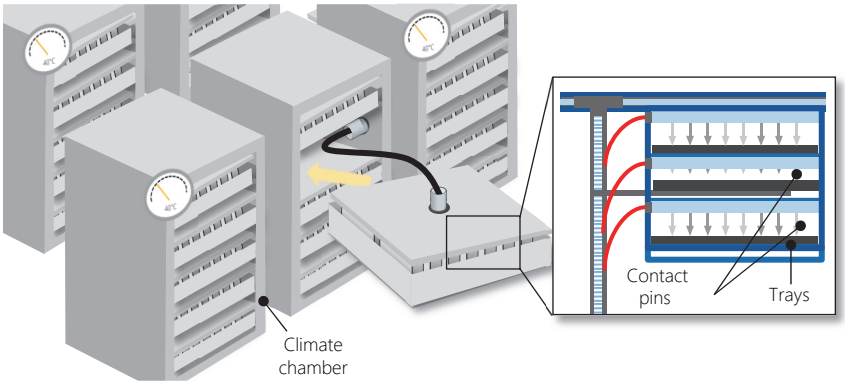

Electrode manufacturing | Cell assembly

Production process

- The term "formation" refers to the initial charging and discharging processes of the battery cell.
- For the formation procedure, the cells are placed into formation racks in special product trays and are contacted by contact pins.
- The cells are then charged or discharged according to precisely defined current and voltage profiles.
- During formation, lithium ions are deposited in the crystal structure of the graphite on the anode side. This forms the solid electrolyte interface (SEI), which is a boundary layer between the electrolyte and the electrode.
- The parameters during formation vary depending on the cell manufacturer and have a great impact on the cell's performance. The formation depends on the cell concept as well as the cell chemistry and represents the core knowledge of a cell manufacturer.
- Pouch cells are usually pressurized during the forming process by special product trays.

Process parameters & requirements

- First charging process: approx. 0.1 - 0.5 C
- Gradual increase in C rates with each charging and discharging cycle
- Duration of formation process: up to 15 hours
- Low contact resistance at the spring contact pins

Quality parameters [excerpt]

- Formation of the SEI layer
- Stability and composition of the SEI layer
- Internal resistance of the cell
- Cell capacity after formation

Current technology alternatives

- There are different procedures for the formation depending on the cell manufacturer and the cell chemistry.

Innovations/Trends

- Inline measurement technology for early quality detection
- Open forming with the cell open to allow the gases produced to escape
- Forming at higher temperatures

Production costs* [excerpt]

Investment for machinery and equipment: €65m - €95m
(Formation)

* Study by PEM of RWTH Aachen University: 10 GWh p.a., approx. 30,000,000 pouch cells p.a., cell capacity: 80 Ah

Degassing

Cell finishing

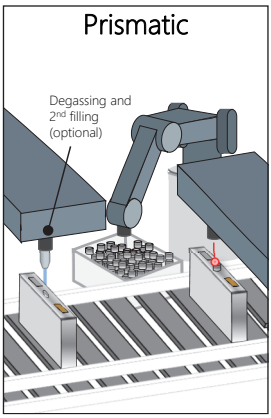

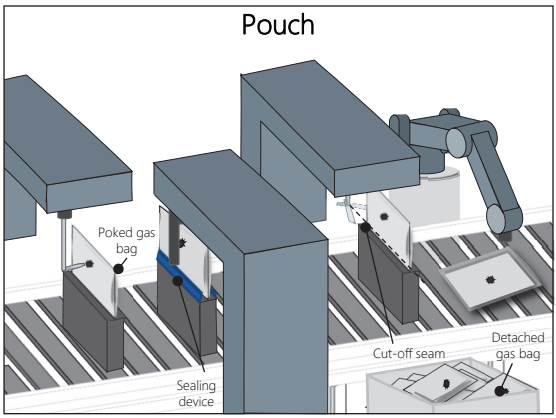

Electrode manufacturing | Cell assembly

Production process

- During the first charging process (especially with larger cells), a large amount of gas is generated.
- In the pouch cell, these gases formed during formation are collected into a dead space (also described as a "gas bag"). During the degassing process, the gas pocket is pierced, and vacuum is applied. The escaping gases are extracted. Then the area between the gas pocket and the cell is sealed under vacuum. The gas pocket is separated and disposed as a hazardous waste. A final folding and, if necessary, gluing of the sealing edges to reduce the outer dimensions of the pouch cell can optionally be carried out.
- In the case of the prismatic cell, the temporary stopper is removed, and the cell is also degassed using vacuum. If necessary, a second filling can take place. Eventually, the cell is sealed.
- Depending on occupational health and safety as well as environmental protection regulations, the extracted gases are subject to aftertreatment (e.g. RTO) before they are fed into the exhaust air system.
- Particularly in case of smaller cells with lower gas generation and depending on the manufacturer, the gas ash is not separated after degassing.

Process parameters & requirements

- Pouch cells: folding and gluing of seal seams to increase volumetric energy density
- Particularly dry (or even inert) environment required
- Sealing against moisture and oxygen

Quality parameters [excerpt]

- Residual gas inside the cell
- Damage-free cell handling (different characteristics of the gas bubbles)

Current technology alternatives

- Pressing of the cells for degassing
- Sealing and folding technology

Innovations/Trends

- Integration of degassing steps for ever larger cylindrical formats

Production costs* [excerpt]

Investment for machinery and equipment: €10m - €15m
(Degassing)

* Study by PEM of RWTH Aachen University: 10 GWh p.a., approx. 30,000,000 pouch cells p.a., cell capacity: 80 Ah

Aging
Cell finishing

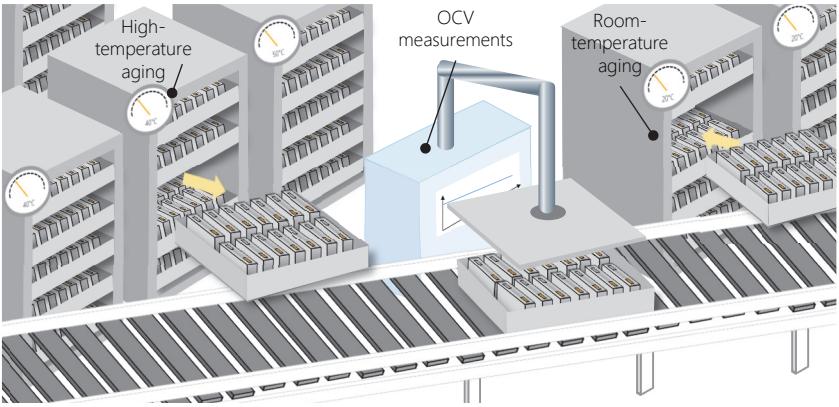

Electrode manufacturing | Cell assembly

Production process

- Aging is one of the cell quality determination steps and part of the end-of-line (EoL) test.
- For this purpose, the cells are stored in so-called aging racks and/or towers.
- A distinction is made between high-temperature (HT) and room-temperature (RT) aging.
- Cell properties are monitored by regular open circuit voltage measurements over a certain period of time (up to three weeks).
- If no significant change in cell properties occurs during the entire period, the cell is considered to be okay and can be shipped.
- The duration of the aging process depends heavily on the particular cell manufacturer and the cell chemistry used.
- In contrast to formation, pouch cells are not pressurized in this process step.

Process parameters & requirements

- State of charge (SoC) of the cell at the beginning of the aging process: 30 - 80%
- Aging time: up to 3 weeks
- Room temperature: approx. 20 - 25°C
- High temperature: approx. 30 - 50°C

Quality parameters [excerpt]

- Self-discharge rate (increased loss rate: >5 mV/week may indicate cell-internal short circuits, e.g.)

Current technology alternatives

- A wide variety of procedures exists for the sequence and duration of HT and RT aging, depending on the cell manufacturer and the cell chemistry.

Innovations/Trends

- Measurement technology for early quality detection

Production costs* [excerpt]

Investment for machinery and equipment: €15m - €45m
(Aging)

* Study by PEM of RWTH Aachen University: 10 GWh p.a., approx. 30,000,000 pouch cells p.a., cell capacity: 80 Ah

EoL Testing

Cell finishing

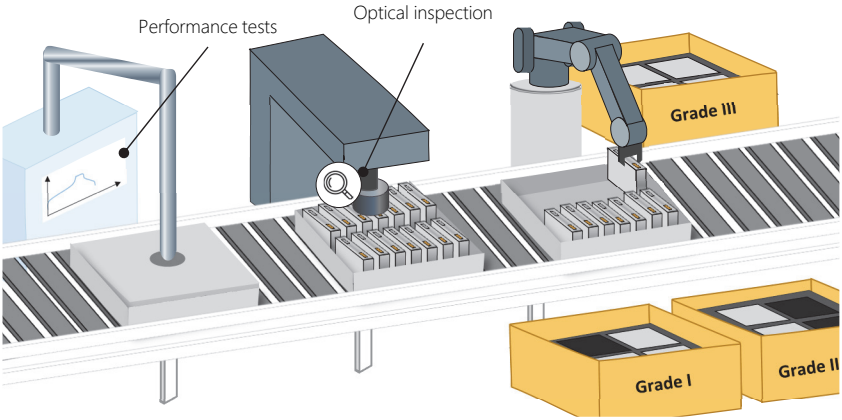

Electrode manufacturing | Cell assembly

Production process

- Before the cells leave the plant, they are tested in an end-of-life (EoL) test stand.
- The cells are removed from the product trays of the aging racks and fed to the test station.
- Depending on the manufacturer, various tests are performed – e.g. pulse tests, internal resistance measurements (DC), optical inspections, OCV tests, capacity tests, and leak tests. After that, the cells are discharged to the shipping state of charge.
- Following testing, many cell manufacturers grade their cells according to performance data ("grading").
- Once testing is complete and all tests have been successfully passed, the cells can be packaged and shipped.
- For transport, the cells are usually covered with a plastic cover and stacked in a cardboard box.

Process parameters & requirements

- Allowable loss rate: <5 mV/week

Quality parameters [excerpt]

- Low self discharge
- Low internal resistance
- Constant capacity

Current technology alternatives

- Depending on the cell manufacturer, different test sequences and test durations exist.

Innovations/Trends

- Reduction or integration of the EoL test in upstream process steps

Production costs* [excerpt]

Investment for machinery and equipment: €5m - €15m
(EoL test)

* Study by PEM of RWTH Aachen University: 10 GWh p.a., approx. 30,000,000 pouch cells p.a., cell capacity: 80 Ah

Factory Concept

for the production of a lithium-ion battery cell

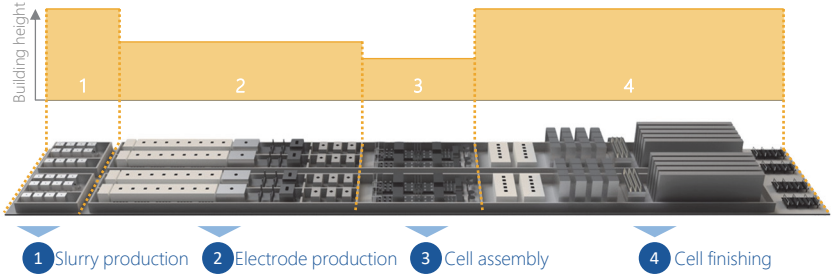

The factory concept for battery cell production is divided into different areas with varying structural requirements.

- **Slurry production**: multi-story construction for gravimetric process control and dosing of powder materials and solvents
- **Electrode production**: single-story hall with increased building height for complex exhaust air technology and solvent recovery
- **Cell assembly**: compact assembly hall with low plant height in a drying room environment and modular structure
- **Cell finishing**: up to twelve-meter-high building with high-bay warehouse construction for forming and aging processes under defined air conditioning

Material flow of intermediate products & components (pouch)

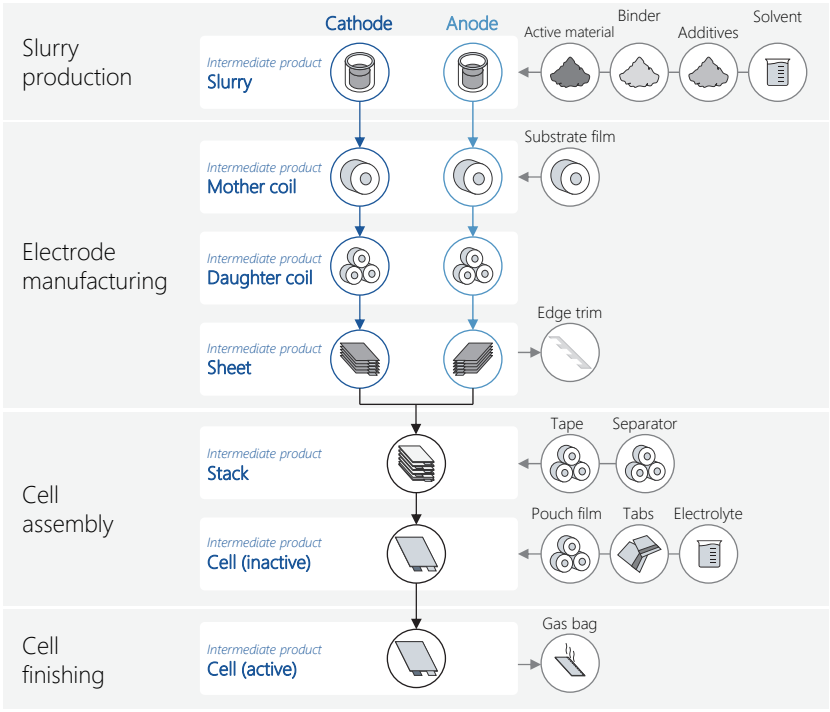

* Simplified and non-scale representation of a factory layout. Dimensions and number of systems depend heavily on cell design and production requirements.

Production Environment

in the battery manufacturing process chain

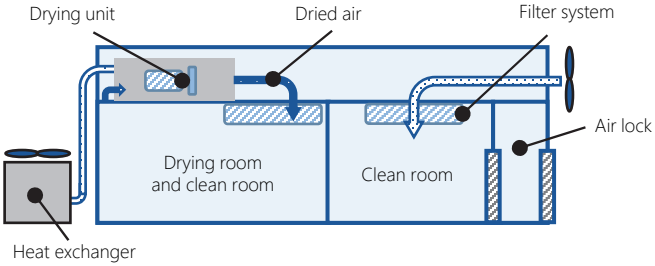

	Clean room classes	Drying room (dew point)	Temperature	Comments
Mixing Coating Drying Calendering Slitting	ISO 7 - 8	**Water-based electrodes:** Controlled process conditions Semi-dry (5°C to -5°C) **NMP-based electrodes:** Dry (0°C to -30°C) to very dry (-40°C to -60°C)	22°C ±2°C	Electrode production takes place under clean room conditions, since foreign particles in the coating cannot be removed by cleaning methods (such as suction) later in the process.
Vacuum drying		Encapsulated process [Vacuum or inert]		
Cutting Stacking/ Winding Packaging EL filling	min. ISO 7	Very dry (-30°C to -60°C)	22°C ±2°C	Cell assembly must be carried out under dry conditions, as water inside the cell leads to severe quality loss (service life) and safety risks (formation of hydrofluoric acid).
Soaking Formation	/	/	20°C to 50°C	Cell finishing takes place in a normal environment. Since the cell is already sealed and degassing takes place in a vacuum chamber, there are lower requirements for the particle environment and humidity.
Degassing	min. ISO 7	Very dry (-40°C to -60°C)	22°C ±2°C	
Aging	/	/	20°C to 50°C	
EoL testing			22°C ±2°C	

Online Industry Guide

The key to battery production

VDMA
Battery Production

Discover Europe's innovative strength in battery production!

In need of tailor-made solutions for your battery production? Are you planning to set up a production line or are you looking for strong partners for process development?

The "Online Industry Guide" from the VDMA Battery Production Division shows all interested parties which European companies offer high-end technologies and individual expertise along the entire process chain.

Available online

Benefit from multiple advantages!

- **High-end expertise – made in Europe:** technologically leading, adaptable solutions instead of "one size fits all" concepts
- **Battery team:** an agile network of specialized providers that work together to master any challenge
- **Expertise from A to Z:** from material handling to quality assurance – everything from a single source
- **Customized solutions:** machines and processes individually tailored to your requirements
- **Reliability & service:** customer focus, competent contact persons, and worldwide service reliability
- **Sustainability & efficiency:** European technologies set standards in resource conservation and circular economy.

Visit the "Online Industry Guide" and discover the right partners for battery production!

www.vdma-industryguide.com/batteryproduction

Guides
on electric mobility

In its publications on batteries, the Chair of Production Engineering of E-Mobility Components (PEM) of RWTH Aachen University, in collaboration with VDMA, describes the process and recycling chains from a single cell all the way to the entire battery pack and discusses the manufacturing methods used for the various components.

AVAILABLE ONLINE

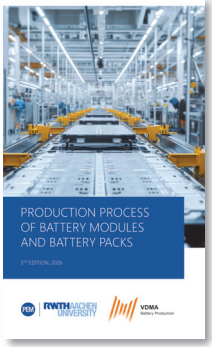

Production Process of Battery Modules and Battery Packs
5th edition | ISBN 978-3-947920-73-0
Published by PEM of RWTH Aachen University & VDMA

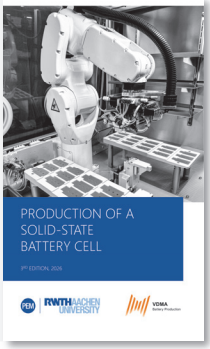

Production of a Solid-State Battery Cell
3rd edition | ISBN 978-3-947920-75-4
Published by PEM of RWTH Aachen University & VDMA

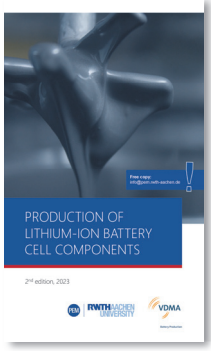

Production of Lithium-Ion Battery Cell Components
2nd edition | ISBN 978-3-947920-50-1
Published by PEM of RWTH Aachen University & VDMA

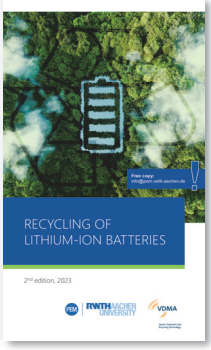

Recycling of Lithium-Ion Batteries
2nd edition | ISBN 978-3-947920-43-3
Published by PEM of RWTH Aachen University & VDMA

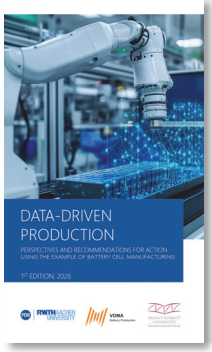

Data-Driven Production: Perspectives and Recommendations for Action Using the Example of Battery Cell Manufacturing
1st edition | ISBN 978-3-947920-77-8
Published by PEM of RWTH Aachen University & VDMA

STUDIES, GUIDELINES,
WHITE PAPERS

Further guidelines and publications:
www.pem.rwth-aachen.de

PEM of RWTH Aachen University / VDMA
Production Process of a Lithium-Ion Battery Cell
Aachen, February 2026, 5th edition – ISBN: 978-3-947920-71-6

PEM | RWTH AACHEN UNIVERSITY

VDMA
Battery Production